Features:

- Through-beam , Emitter/receiver set;
- 30*30*light curtain height;
- Aluminum alloys housing;
- DC 4-wire, switching output;
- Pigtail version; Infrared light

CE

Dimensioned drawing

Unit(mm)

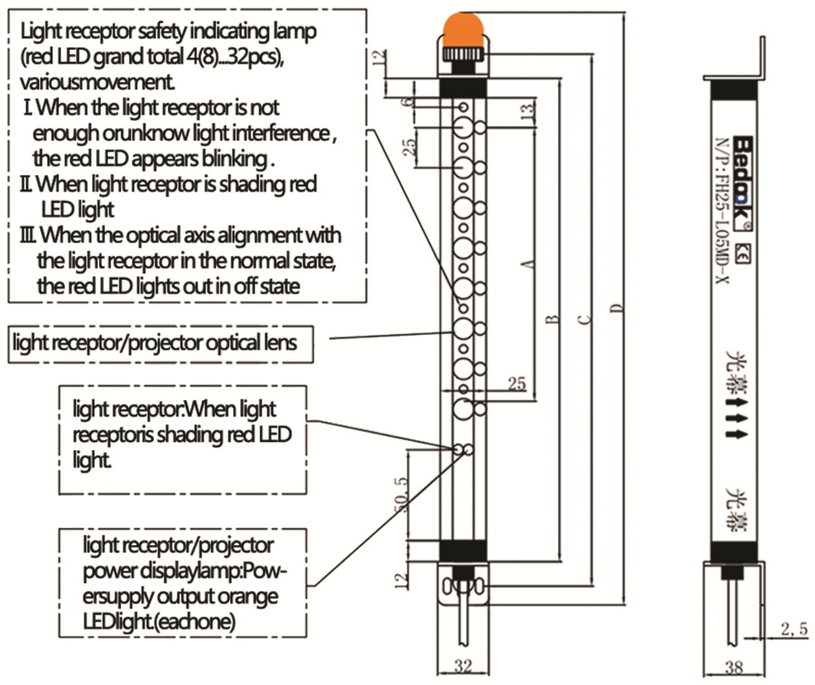

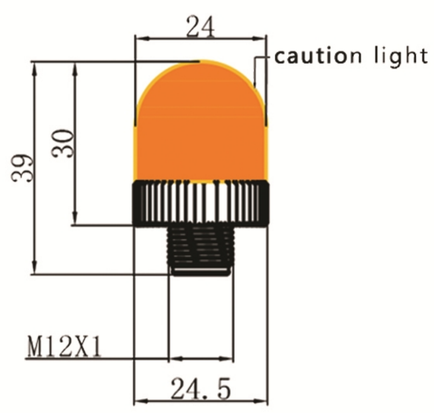

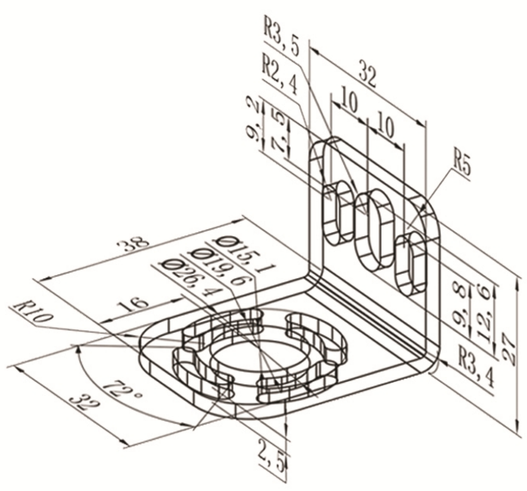

Model No.

No. of beams	8	12	16
Detection heigh (A)	175	275	375
Light screen height (B)	262.5	362.5	462.5
Mounting hole center distance (C)	293.1	393.1	493.1
Total height (D)	328.8	428.8	528.8
NPN	FH25-L05MN-8	FH25-L05MN-12	FH25-L05MN-16
PNP	FH25-L05MP-8	FH25-L05MP-12	FH25-L05MP-16

No. of beams	20	24	32
Detection height (A)	475	575	775
Light screen height (B)	562.5	662.5	862.5
Mounting hole center distance (C)	593.1	693.1	893.1
Total height (D)	628.8	728.8	928.8
NPN	FH25-L05MN-20	FH25-L05MN-24	FH25-L05MN-32
PNP	FH25-L05MP-20	FH25-L05MP-24	FH25-L05MP-32

Technical data

Electrical data	Operating voltage	12-24V DC
	Light type	Infrared light 870 nm
	Response time	ON-12...50ms; OFF-12ms
	Load current	≤200mA
Environment	Light immunity	Lamplight:<3000Lux/Sunlight:<10000Lux
	Ambient temperature	-10...55℃ with no icing
	Ambient humidity	35--85% with no condensation
	Ingress protection	IP65
Mechanical data	Housing material	Protective cover:PMMA ; Housing;Aluminum alloys ;
		The upper&lower lid;Zinc die-castings;Bracket;
		(316S12) ; Sealing ring;silicone
Electrical connection	Operating indicator	Red LED
Accessories	Connectors	M12 connector + PVC-cable/ 200mm; 4*0.16mm²
	Accessories(to be ordered separately)	NO
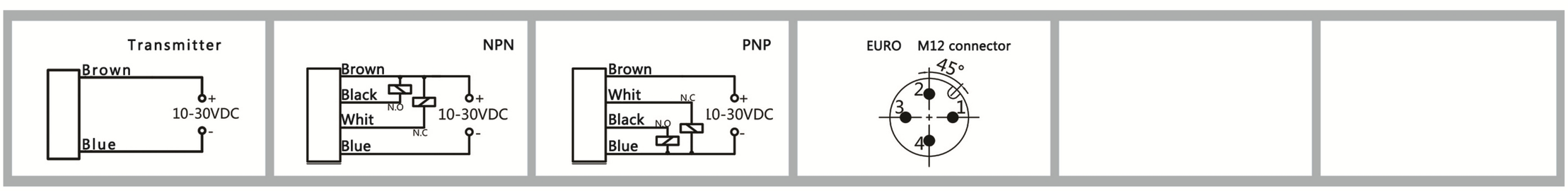
Wiring